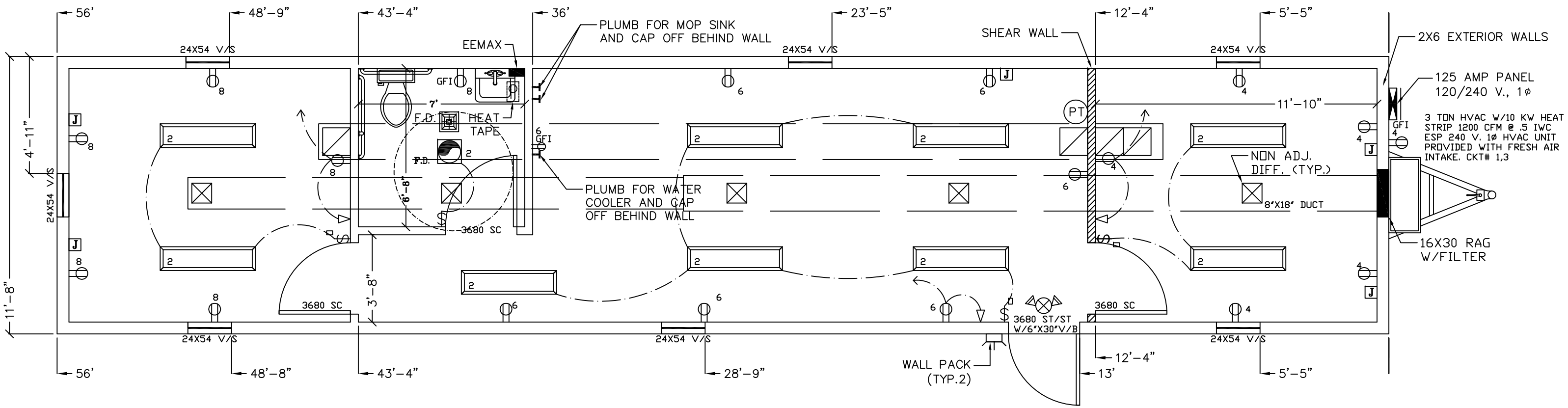

DIAMOND BUILDERS, INC. 440 THOMPSON DRIVE, DOUGLAS, GA. 31535 PHONE: (912)384-7080 FAX: (912)384-5721	DIAMOND BUILDERS INC	SALESMAN: WESLEY SPIVEY SIZE: 12X56 OCCUPANCY: BUSINESS	STATE LABEL(S) AL,AR,DE,FL,GA,LA, MD,MS,NC,NJ,OH,OK, PA,SC,TX,VA,WV,IN.	SNOW LOAD: 40 WIND LOAD: 170 QUOTE#: 21966	DATE: 9/26/2025 9:28 AM DRAWN BY: BM SERIAL#: QUOTE 21966	AUTHORIZED SIGNATURE: